CONSIDERING THE DESIGN OF THE FLEXURE HINGE CONTOUR FOR THE SYNTHESIS OF COMPLIANT LINKAGE MECHANISMS

Sebastian Linß; Andrija Milojević**; Lena Zentner**

*Technische Universität Ilmenau, Mechanism Technology Group
**University of Niš, Department of Mechatronics and Control

ABSTRACT

Due to their advantages, compliant linkage mechanisms are state of the art in high precise motion systems for guiding and transfer tasks. Therefore, especially prismatic flexure hinges with basic cut-out geometries are used as revolute joints. In this contribution, with the help of the finite elements method (FEM) it is shown that the possible motion precision of compliant straight-line mechanisms and compliant grippers is determined by the dimensions and particularly by the notch contour of the flexure hinges. For this reason, both aspects are newly considered as free parameters regarding the multi-criteria synthesis of compliant linkage mechanisms. It can be shown that 4th order polynomial contours are suitable to realize both highly precise guiding and a large motion range.

Index Terms - Design, Flexure Hinge, Contour, Synthesis, Compliant Mechanisms

1. INTRODUCTION

For devices in precision engineering and increasingly also in the course of technological progress in micromechanical systems and nanotechnology applications, special standards are necessary regarding the drive and motion system. These requirements can be realized with conventional rigid-body mechanisms only with a great constructional effort, or not at all. Therefore, compliant mechanisms are an often used alternative for special guiding and transfer tasks [1], [2]. Additionally, a trend to miniaturize mechanical structures has been observed in mechanism technology in Germany since the early nineties, made possible by new materials and modern manufacturing technologies [3].

Because of their advantages, compliant mechanisms with a concentrated distribution of compliance have become established as monolithic linkage mechanisms in many technical fields of application. In these solid-state mechanisms, the flexibility is achieved only by flexure hinges, which fulfill the function of conventional revolute joints but are limited to small angular deflections of a few degrees [4], [5]. For guiding and transfer tasks in ultra-precision systems of microsystems technology, precision engineering or metrology, mostly prismatic flexure hinges with basic cut-out geometries are used as material coherent revolute joints realizing a plane motion.

Because of the material coherent pair, flexure hinges have a small motion range, which is limited by the allowable stress. In addition, the load-dependent shift of its axis of rotation is disadvantageous. The demand for larger angular deflection and a low shift of the rotational axis results in very complex flexures (e.g. [6], [7]) or an increased number of joints in the mechanism (e.g. [8], [9]). With a few exceptions, the contour optimization of flexure hinges with regard to both of the opposed criteria is not yet the subject of research [10].

In contrast to rigid-body mechanisms, the structural and dimensional synthesis of which are discussed in the literature in detail, many relevant aspects related to the geometric design of flexure hinges with regard to compliant mechanism synthesis have not yet been adequately investigated. This includes in particular the effect of the shift of the rotational axis of single flexure hinges on the motion behavior of the compliant mechanism. For four-bar and multi-bar compliant mechanisms, the advantages of using long beam joints compared with film or notch joints in terms of the achievable range of motion are described in the literature [11]. Furthermore, there are studies of different compliant guiding mechanisms based on flexure hinges with varying hinge dimensions [12], [13], as well as comparative investigations on how notch hinges with different basic contours influence the motion behavior [5]. The task of a precise motion is a current challenge not only for guiding mechanisms, but also for the design of mechanisms with transfer tasks such as monolithic grippers [8], [14]. Especially as concerns macroscopic compliant gripping mechanisms, which are being developed for micro positioning, there are only a few investigations on the influence of the flexure hinge geometry on the guiding and transfer behavior [15], [16].
According to our own studies [17], [18] in this contribution, with the help of the finite elements method (FEM) it is shown that the possible motion precision of compliant straight-line mechanisms and compliant grippers is determined by the dimensions and particularly by the notch contour of the flexure hinges. For this reason, both aspects are newly considered as free parameters regarding the multi-criteria synthesis of compliant linkage mechanisms.

2. MATERIAL AND METHOD

Because the guiding and transfer behavior of compliant linkage mechanisms is defined by several different geometric parameters, the object of this contribution is the model-based investigation of the flexure hinge contour and dimensions. The investigation is exemplified for four different mechanisms, which are known from literature:

- Four-bar rectilinear guiding mechanisms after EVANS and ROBERTS [19],
- multi-bar grippers after CHRISTEN [5] and KEOSCHKERJAN [20].

Due to the problem of continuum mechanics, the sequential procedure of synthesis and constructional design, which is known for rigid-body mechanisms, cannot be applied to compliant mechanisms [5]. Because in this case, in addition to the motion task, a special force-displacement characteristic also has to be realized, the kinematic and kinetic behavior must be considered simultaneously [21]. At the same time, consideration of the structural strength is important. In principle, there are two different synthesis methods: the approach of *rigid-body replacement synthesis* is particularly suitable to realize a high motion precision, while *topology optimized structures* simply allow a desired stiffness behavior [22]. The investigations in this contribution are based on the first approach with the following steps:

1. Determining the kinematic parameters of the rigid-body mechanism,
2. Modeling of the compliant mechanism,
3. Modeling of the flexure hinges with different cut-out geometries,
4. FEM analysis of the compliant mechanism, verification of results and, if necessary, iterative improvement.

This enhanced synthesis method differs from previous approaches (e.g. [13], [21]) in considering especially the influence of the flexure hinge contour as a function of the hinge dimensions on the motion precision of the compliant mechanism during synthesis. For the description of the cut-out geometries, optimized corner-filleted [23] and polynomial contours [24] are investigated in addition to standard geometries like semi-circular or elliptical contours (see section 2.3).

The aim of this contribution is to investigate the quantitative and qualitative influence of separately optimized flexure hinge contours on the guiding and transfer behavior of compliant linkage mechanisms with a different number of joints in the kinematic chain. Therefore, the following three criteria are examined:

- Motion precision (deviation of the motion of a considered point compared with the rigid-body mechanism),
- shape strength (strain distribution/value of the maximum strain),
- compliance or stiffness (force-displacement relation).

2.1 Starting Point Rigid-Body Mechanism

The EVANS and ROBERTS four-bar linkages realize the guiding of a coupler point *C* on an approximate rectilinear path (see Fig. 1). Respecting suitable geometry conditions for the dimensions as well as the joint coordinates, these rectilinear guiding mechanisms allow a guiding accuracy of the coupler point in the micrometer range according to the kinematic structure of the crank-and-rocker mechanism and the symmetric double-crank mechanism [19]. To determine the kinematic dimensions as well as the initial position for the replacement of the mechanism, the rigid-body mechanism is investigated with the software SAM 6.1. Thus, the actual guiding error y_c can be calculated (see Tab. 1).

Tab. 1. Kinematic dimensions, initial position and guiding error for the both guiding mechanisms

Guiding mechanism after	*a* [mm]	*b* [mm]	*c* [mm]	*d* [mm]	*φ* [°]	input x_c [mm]	error y_c [µm]
EVANS	50.0	100.0	50.0	50.0	300	-10	-55.7
ROBERTS	66.6	66.6	56.6	73.6	35	-10	-25.2

The two gripping mechanisms considered are based on different kinematic chains. Because of the simple kinematic structure of a crank-and-rocker mechanism, the seven-bar gripper after CHRISTEN [5] allows only an approximated parallel motion, while the eleven-bar gripper after KEOSCHKERJAN [20] provides pure translation of the guided end-effectors (see Fig. 2). In the latter case, an additionally coupled parallel-crank mechanism is used to realize a parallel closing motion of both of the end-effector links with the help of a circular translation of the coupler. The chosen kinematic dimensions of both investigated grippers are shown in Tab. 2.

Tab. 2. Hinge and input/output coordinates for both gripping mechanisms

Point	Gripper after CHRISTEN		Gripper after KEOSCHKERJAN	
	x [mm]	*y* [mm]	*x* [mm]	*y* [mm]
1	-88.5	31	0	-25
2	-73	31	0	0
3	-73	6	50	0
4	0	0	50	29
5	0	-12	30	29
6	45	-31	30	58
7	45	-5	236	58
8	65	-5	236	29
9			287	29
10			287	-20

2.2 Modeling of the Compliant Mechanism

Based on the rigid-body replacement approach, all compliant mechanisms are built up as monolithic solid bodies in the CAD model based on the defined kinematic dimensions (cf. Tab. 1 and Tab. 2). The center points of the flexure hinges are equal to the coordinates of the

revolute joints of the rigid-body mechanism. As a boundary condition, fixed supports are applied for the stationary flexure hinges. As input, a linear displacement parallel to the x-axis is used at the coupler point *C* (Fig. 1) and the crank points 5 and 1 (Fig. 2).

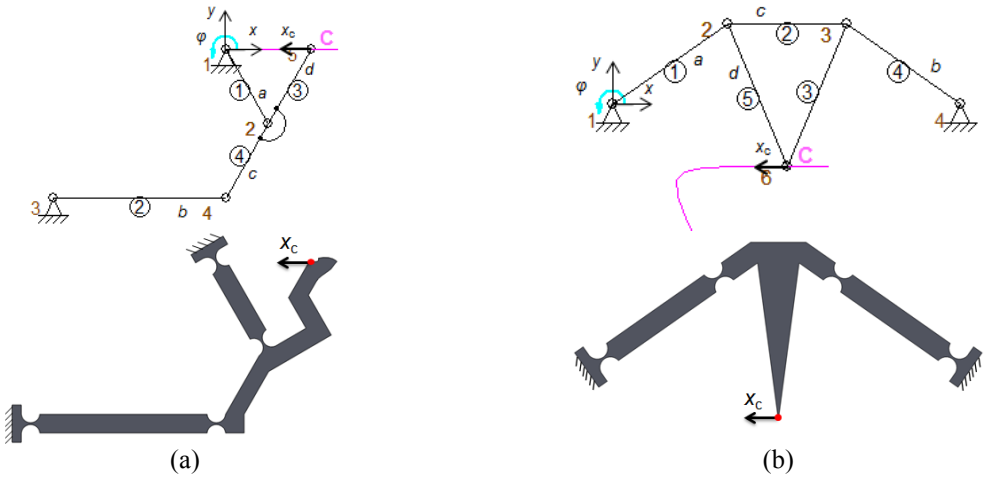

Fig. 1. Rigid-body mechanism and equivalent compliant mechanism of both the investigated guiding mechanisms: (a) rectilinear guiding mechanism after EVANS and (b) rectilinear guiding mechanism after ROBERTS

For the FEM-based investigations, compliant mechanisms with the following design attributes are considered:

- Plane mechanisms with rectangular cross-section of the links and flexure hinges,
- prismatic and symmetric flexure hinges,
- material: aluminum alloy EN AW 7075 with linear elastic material behavior (E = 72 GPa, μ = 0.33 und ρ = 2.8 gcm^{-3}).

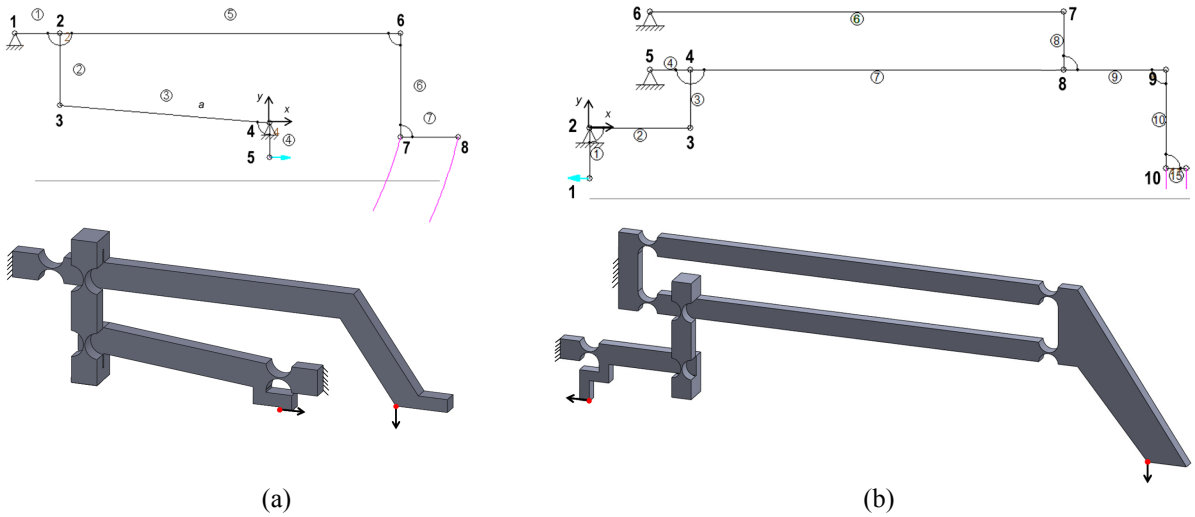

Fig. 2. Half model of the rigid-body mechanism and equivalent compliant mechanism of both the investigated gripping mechanisms: (a) seven-bar gripper after CHRISTEN and (b) eleven-bar gripper after KEOSCHKERJAN

2.3 Modeling of the Flexure Hinges

Geometrical parameters of the flexure hinge dimensions are the hinge length l, the link height H, the minimal notch height h and the hinge width B (see Fig. 3a). For the FEM-based investigations, the variable hinge height $h_K(x)$ of all flexure hinges of the compliant mechanism is described, each with the same cut-out geometry (cf. Fig. 3b):

- K1 – semi-circular contour (radius: $2R = l$),
- K2 – stress-optimal corner filleted contour (radius: $R = 0.1l$) [23],
- K3 – elliptical contour (half radii: $2r_x = 4r_y = l$),
- K4 – 4th-order polynomial contour after equation 1 ($n = 4$) [24],
- K5 – 16th-order polynomial contour after equation 1 ($n = 16$) [24].

$$h_K(x) = \frac{h}{2} + \frac{\left(\frac{H}{2} - \frac{h}{2}\right)}{\left(\frac{l}{2}\right)^n} \cdot x^n \tag{1}$$

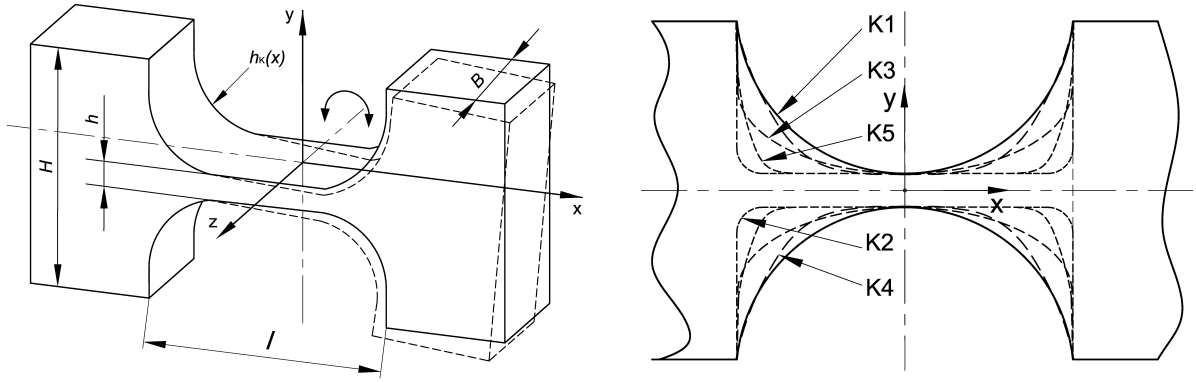

(a) (b)

Fig. 3. Geometric parameters of the investigated flexure hinges: (a) basic hinge dimensions and (b) description of the variable hinge height with the different cut-out geometries K1 to K5

2.4 Determination of the Geometric Parameters for Variation and Discrete FEM Analysis of the Compliant Mechanism

A static structural FEM analysis is applied to the three-dimensional compliant mechanisms. Therefore, ANSYS Workbench 14.0 is used and large deflection (nonlinear geometry) is considered. Due to the symmetry, only half models are considered for both grippers. To investigate only the influence of varying flexure hinge contours and dimensions on the properties of the compliant mechanisms, the link height and the hinge width are chosen to be constant as $H = 10$ mm and $B = 6$ mm for all simulations. The remaining three geometrical attributes for the discrete FEM analysis lead to 45 different compliant mechanisms for each of the four mechanism types. The design of experiments is chosen as a simple method compared with continuous optimization. Thus, the following parameters are varied:

- The cut-out geometry $h_K(x)$ (five contours K1-K5, cf. section 2.3),
- the hinge dimensions l and h (nine different combinations with l = 5, 10, 20 mm and h = 0.3, 0.5, 1 mm).

3. RESULTS

To investigate the three criteria mentioned in section 2, a discrete FEM analysis is applied to the compliant linkage mechanisms to determine the following result variables:

- Path deviation e of a regarded point (deviation between the paths of the rigid-body mechanisms and the compliant mechanism),
- maximum equivalent strain ε_V (location-independent),
- stiffness c (defined by the force which is necessary for deflection).

The simulation results are shown for each of the five contours K1 to K5 as a function of the hinge length l and the minimal hinge height h in Fig. 4, Fig. 5 and Fig. 6.

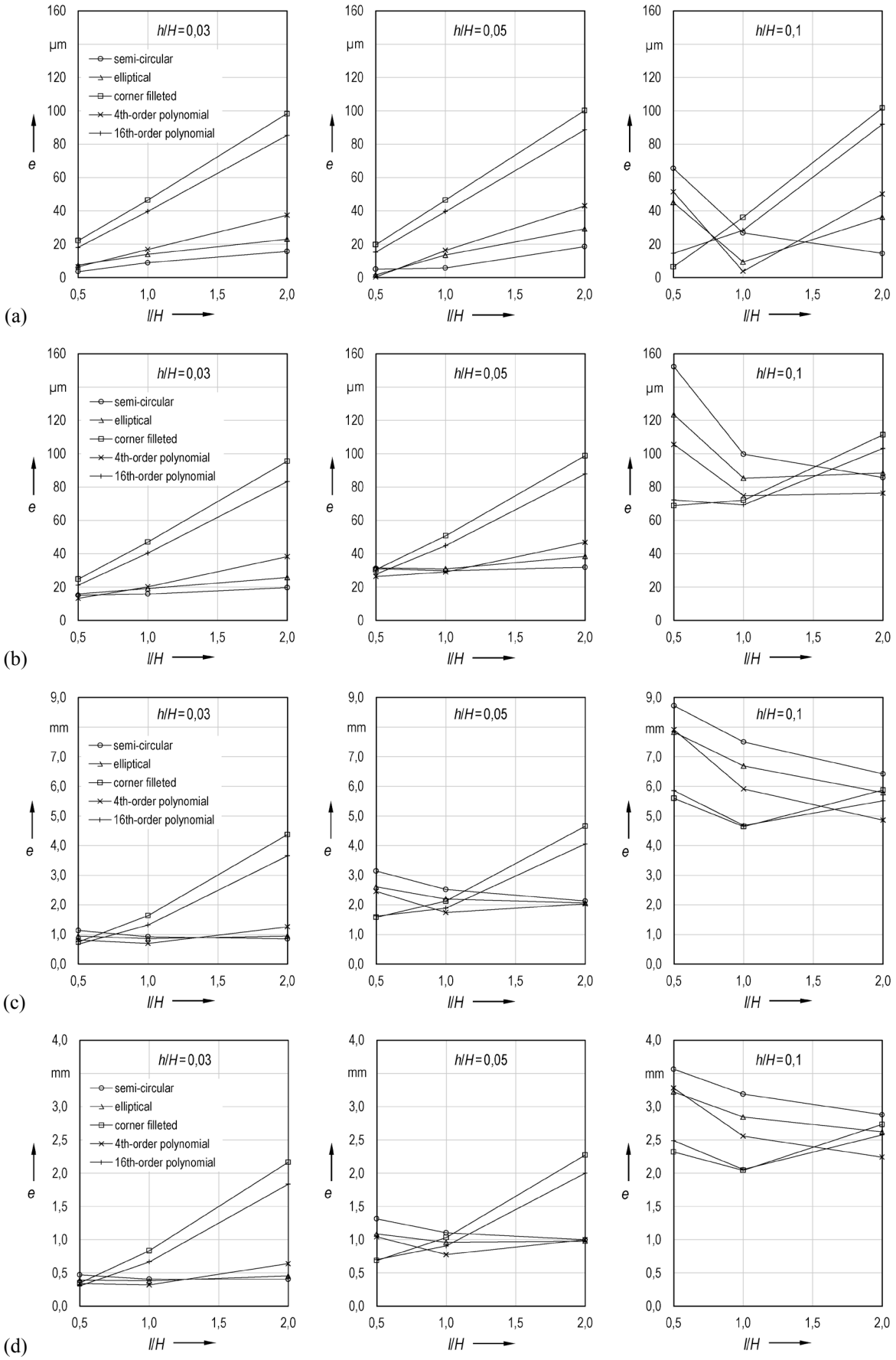

Fig. 4. FEM results of path deviation *e* for the compliant mechanisms after: (a) EVANS (input displacement -10 mm), (b) ROBERTS (-10 mm), (c) CHRISTEN (0,3 mm) and (d) KEOSCHKERJAN (-0,3 mm)

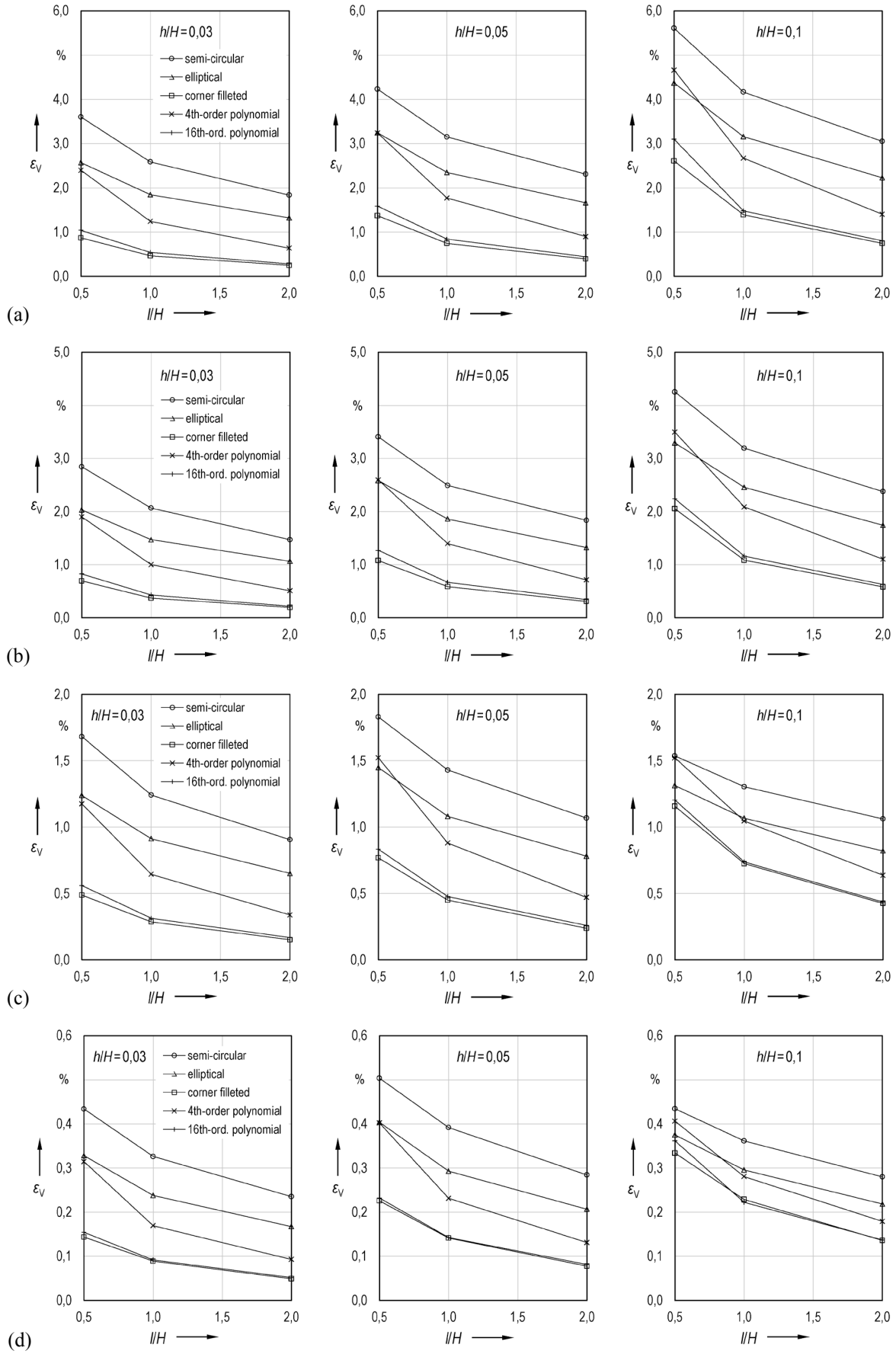

Fig. 5. FEM results of maximum strain ε_V for the compliant mechanisms after: (a) EVANS (input displacement -10 mm), (b) ROBERTS (-10 mm), (c) CHRISTEN (0,3 mm) and (d) KEOSCHKERJAN (-0,3 mm)

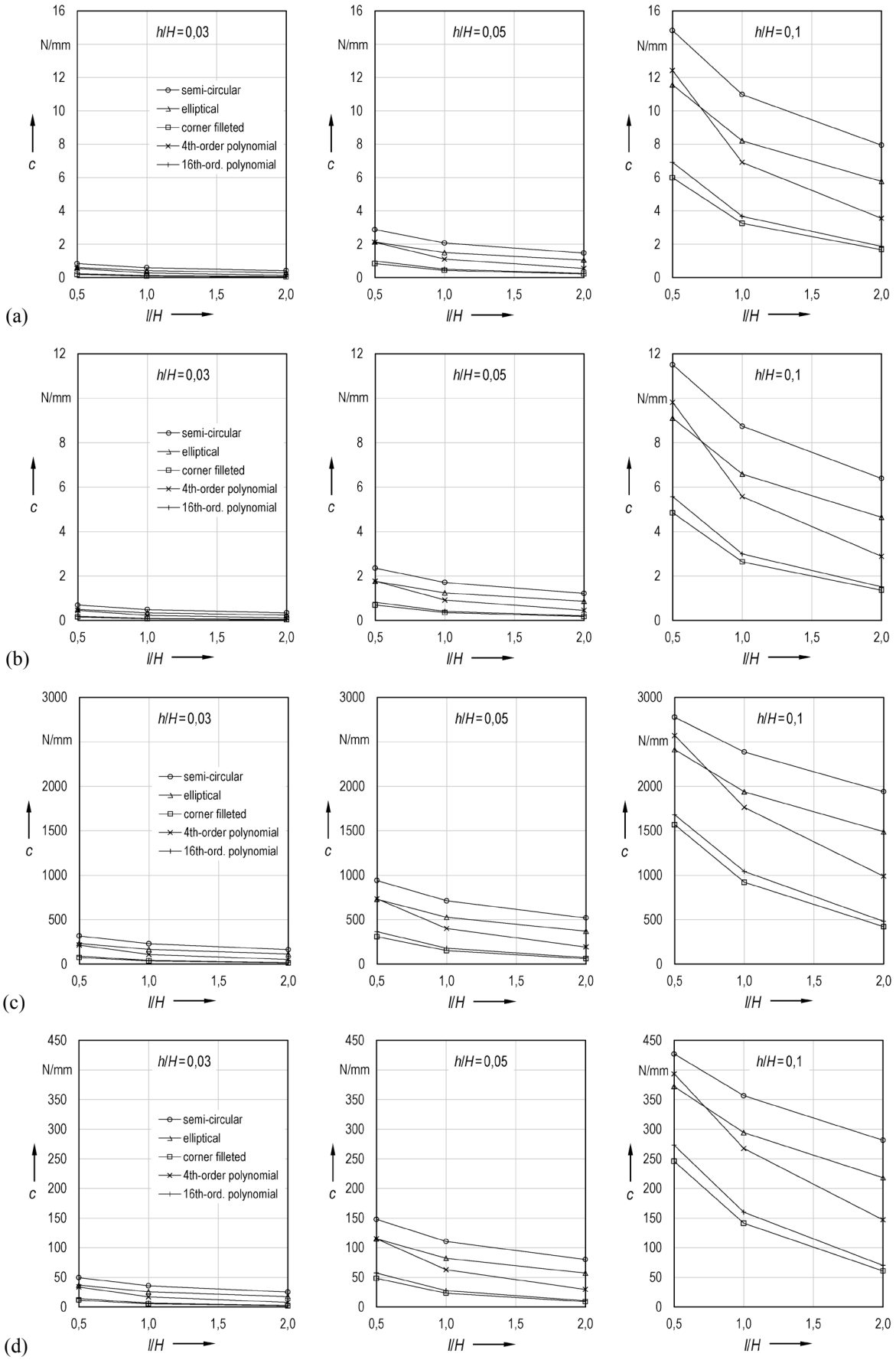

Fig. 6. FEM results of stiffness *c* for the compliant mechanisms after: (a) EVANS (input displacement -10 mm), (b) ROBERTS (-10 mm), (c) CHRISTEN (0,3 mm) and (d) KEOSCHKERJAN (-0,3 mm)

4. DISCUSSION

4.1 Motion Precision

To realize a precise guiding compared with the rigid-body mechanism, no specific flexure hinge contour is optimal in general, because the motion and deformation behavior of compliant linkage mechanisms depend on several geometrical hinge parameters to the same degree. Accordingly, the synthesis of compliant mechanisms for a desired motion behavior represents a multi-criteria optimization problem. However, the following novel correlations can be concluded regarding the analysis of the deviation *e* as relative guiding error:

- The hinge dimensions and in particular the notch contour of the flexure hinges have a strong influence on the guiding accuracy, while the effect of changing the notch contour can be larger as the hinge dimensions vary.
- The qualitative characteristics are independent from the mechanism type and mostly independent from the hinge number and the deviation *e* (micro- or millimeter range)
- The absolute error decreases with a higher number of joints in the kinematic chain because the deflection angle is smaller.
- An increasing ratio h/H (thicker hinges) causes higher errors in general, while the effect of varying the ratio l/H (length change) depends on the chosen notch contour.
- For thin hinges ($h/H = 0.03$), semi-circular but also elliptical and 4th-order polynomial contours are similarly suitable regarding a small deviation, while corner-filleted and 16th-order polynomial contours can lead to high errors.
- For thin hinges, the influence of the notch contour increases with increasing length *l*.

Regarding the criterion of parallel gripping, the maximum rotation of the end-effector link is only 6.5° for the compliant gripper after CHRISTEN. As expected from the rigid-body model analysis, the compliant gripper after KEOSCHKERJAN allows a pure parallel motion of the end-effector plane.

4.2 Shape Strength

The maximum equivalent strain limits the possible stroke and the motion range of a compliant mechanism. The results for both guiding and both gripping mechanisms show that the notch contour has a strong influence on the strain behavior and therefore the shape strength. But depending on the geometrical parameters of the flexure hinge, the following qualitative correlations can be observed independently from the mechanism type:

- The maximum strain values decrease with a larger ratio of l/h (longer hinges) and they increase with a larger ratio of h/H (thicker hinges).
- The maximum strain values significantly decrease with a higher number of joints in the kinematic chain.
- The influence of the contour variation can be as large as the effect of changing the minimal notch height *h* and even larger as the effect of changing the hinge length *l*.
- Semi-circular contours cause very high stresses while corner-filleted and 16th-order polynomial contours allow low stress values. Thus, these latter stress-optimized contours are suitable only regarding shape strength.

4.3 Stiffness

The characteristic of the deformation behavior of all the investigated mechanisms is also independent from the mechanism type and therewith from the hinge number. Varying the geometric parameters of the flexure hinges influences the stiffness of the mechanism as follows:

- Shorter and thicker hinges lead to increased stiffness values, while the influence of length variation is negligible for very thin hinges.
- The influence of the contour variation can be as large as the effect of changing both hinge dimensions *h* and *l*.
- Corner-filleted 16th-order polynomial contours lead to low stiffness values, while circular contours cause a high stiffness (good regarding natural frequencies).

4.4 Conclusions

Due to the multi-criteria optimization problem, the general identification of a suitable cut-out geometry for a precise motion is not possible independent of the flexure hinge dimensions. Based on the presented results, the current state of research is enhanced by the following conclusions:

- For the regarded mechanisms, the increase of the number of joints in the kinematic chain leads to decreasing values of the path deviation as well as the strain in the compliant mechanism. The qualitative influence of varying the notch contour remains the same.
- A flexure hinge with a pivot optimized cut-out geometry (e.g. semi-circular or asymmetric contours [18], [23]) is not always a good choice when designing a compliant linkage mechanism.
- Regarding the simultaneous realization of a highly precise motion and high shape strength, 4th-order polynomial contours are suitable.

The results in this contribution are based on the assumptions of ideal geometries and homogeneous material as well as the definition of special parameters, which are varied for four chosen compliant linkage mechanisms. Further parameters for simulative and experimental investigation as well as influences regarding the design of monolithic mechanisms with flexure hinges are:

- Geometric parameters of the flexure hinge (influence of scaling the hinge dimensions, optimized cut-out geometries, different symmetrical attributes),
- constructional implementation of the flexure hinges into the mechanism (orientation of the hinges, available design space, same or different hinges in one mechanism, position of replacement),
- input boundary conditions (location, absolute value and direction of input as well as realization of rotational inputs),
- output boundary conditions (different force and displacement conditions in addition to the considered case of free state),
- manufacturing technology and influence of geometric tolerances,
- influence of special effects (e.g. buckling, transient deformation).

In addition to the variety of input parameters, there are further relevant output criteria in precision engineering, which have not been investigated yet, e.g.:

- Motion transmission ratio (ratio of input/output displacement),
- thermal behavior,
- vibration behavior.

5. SUMMARY

In this paper, the potential of influencing the precision and motion range of compliant linkage mechanisms by the geometrical design of the dimensions and particularly of the notch contour of prismatic flexure hinges is described. The investigations are exemplified for two compliant guiding and two compliant gripping mechanisms with different numbers of hinges. Therefore,

the flexure hinge length, the minimal hinge height and the notch contour, which is described with five standard or especially determined cut-out geometries, are geometric parameters of the FEM simulations.
Regarding the detailed investigation of the notch contour as a newly considered step of the compliant mechanism synthesis, the results confirm that it is possible to suggest suitable contours for the entire compliant mechanism by analyzing the stress and deformation behavior of only one single flexure hinge. Because of the multi-criteria dependencies, this approach is limited to thin hinges regarding the motion behavior. It is also found that 4th-order polynomial contours are particularly suitable to realize a precise motion for a large stroke of a coupler point. Any further application of specifically optimized flexure hinge contours based on freeform geometries can have high potential. In this context, issues of manufacturing technology and robustness must be considered too.

ACKNOWLEDGMENTS

This research was supported by the Deutsche Forschungsgemeinschaft (DFG) under Grant No. ZE 714/10-1. The financial support is gratefully acknowledged.

REFERENCES

[1] Howell, L. L., Midha, A.: A Method for the Design of Compliant Mechanisms with Small-Length Flexural Pivots. *Journal of Mechanical Design* 116 (1), 280–290 (1994)

[2] Howell, L. L., Magleby, S. P., Olsen, B. M.: *Handbook of Compliant Mechanisms.* Wiley (2013)

[3] Bögelsack, G.: Impulse und Wirkungen technologischen Fortschritts auf die Mechanismentechnik. *Fortschritt-Berichte VDI: Reihe 1, Konstruktionstechnik/Maschinenelemente; 255.* VDI-Verl., Düsseldorf 131–142 (1995)

[4] Lobontiu, N.: *Compliant Mechanisms: Design of Flexure Hinges.* CRC Press, Boca Raton, FL (2003)

[5] Christen, G., Pfefferkorn, H.: Nachgiebige Mechanismen: Aufbau, Gestaltung, Dimensionierung und experimentelle Untersuchung. *VDI-Berichte* 1423*,* 309–329 (1998)

[6] Henein, S., Spanoudakis, P., Droz, S., Myklebust, L. I., Onillon, E.: Flexure Pivot for Aerospace Mechanisms. In: *Proceedings of the 10th European Space Mechanisms and Tribology Symposium* (2003)

[7] Fowler, R. M., Magleby, S. P., Howell, L. L.: Flex-16: A Monolithic Large-Displacement Compliant Rotational Hinge. In: *Proceedings of IDETC/CIE* (2012)

[8] Beroz, J., Awtar, S., Bedewy, M., Tawfick S., Hart A. J.: Compliant Microgripper with Parallel Straight-Line Jaw Trajectory for Nanostructure Manipulation. In: *Proceedings of the 26th Annual Meeting of the American Society for Precision Engineering* (2011)

[9] Cosandier, F., Chatagny, V., Clavel, R.: Optimizing the Design of the 13-Hinge Rectilinear Stage for High Straightness Translation. In: *Proceedings of the 13th World Congress in Mechanism and Machine Science,* 8 (2011)

[10] Linß, S., Erbe, T., Theska, R., Zentner, L.: The Influence of Asymmetric Flexure Hinges on the Axis of Rotation. In: *Proceedings of the 56th International Scientific Colloquium* (2011)

[11] Pavlovic, N. T., Pavlovic, N. D.: Mobility of the Compliant Joints and Compliant Mechanisms. *Theoretical Applied Mechanics* 32 (4), 341–357 (2005)

[12] Pavlovic, N. T., Pavlovic, N. D.: A Design of Evans Compliant Four-Bar Linkage for Rectilinear Guiding. In: *Proceedings of the 3rd International Conference "Research and Development in Mechanical Industry" RaDMI 2003,* 425–432 (2003)

[13] Pavlovic, N. T., Pavlovic, N. D.: Compliant Mechanism Design for Realizing of Axial Link Translation. *Mechanism and Machine Theory* 44, 1082–1091 (2009)

[14] Zubir, M., Nashrul M., Shirinzadeh, B., Tian, Y.: Development of a Novel Flexure-Based Microgripper for High Precision Micro-Object Manipulation. In: *Sensors and Actuators: International Journal Devoted to Research and Development of Physical and Chemical Transducers* 150 (2), 257–266 (2009)

[15] Raghavendra, M. R. A., Kumar, A. S., Jagdish, B. N.: Design and Analysis of Flexure-Hinge Parameter in Microgripper. *The International Journal of Advanced Manufacturing Technology* 49 (9), 1185–1194 (2010)

[16] Bharanidaran, R., Ramesh, T.: Design of Monolithic Microgripping Device with Integrated Force Sensing Jaw. In: *Proceedings of the 3rd European Conference of Mechanical Engineering (ECME' 12),* 168–173 (2012)

[17] Linß, S., Milojevic, A.: Model-Based Design of Flexure Hinges for Rectilinear Guiding with Compliant Mechanisms in Precision Systems. In: Zentner, L. (Ed.): *Mechanismentechnik in Ilmenau, Budapest und Niš.* Ilmenau: Universitätsverlag Ilmenau, (Berichte der Ilmenauer Mechanismentechnik, 1), 13–24 (2012)

[18] Linß, S., Milojevic, A., Zentner, L.: On the Influence of Flexure Hinge Geometry on the Motion Range and Precision of Compliant Gripping Mechanisms. In: *Proceedings of the 2nd International Conference on Mechanical Engineering in XXI Century,* 255–260 (2013)

[19] Wazan, O.: *Rechnergestützte Untersuchung und Auswahl von Koppelmechanismen für Geradführungen.* Dissertation. Ilmenau, TU Ilmenau, Fakultät für Maschinenbau (2005)

[20] Keoschkerjan, R., Wurmus, H.: A Novel Microgripper with Parallel Movement of Gripping Arms. In: *Proceedings of the 8th International Conference on New Actuators,* 321–324 (2002)

[21] Modler, N., Hufenbach, W., Renner, O., Knötig, T., Modler, K.-H., Li, S.: Auslegung und Gestaltung von Nachgiebigkeitsmechanismen. In: *Bewegungstechnik 2010 : Koppelgetriebe, Kurvengetriebe und geregelte Antriebe im Maschinen-, Fahrzeug-, und Gerätebau.* Düsseldorf : VDI, 177–190 (2010)

[22] Pavlovic, N. D., Petkovic, D., Pavlovic, N. T.: Optimal Selection of the Compliant Mechanism Synthesis Method. In: *Proceedings of The International Conference on Mechanical Engineering in XXI Century,* 247–250 (2010)

[23] Linß, S., Zentner, L.: Gestaltung von Festkörpergelenken für den gezielten Einsatz in ebenen nachgiebigen Mechanismen. In: *9. Kolloquium Getriebetechnik*, 291–311 (2011)

[24] Linß, S., Erbe, T., Zentner, L.: On Polynomial Flexure Hinges for Increased Deflection and an Approach for Simplified Manufacturing. In: *Proceedings of the 13th World Congress in Mechanism and Machine Science,* A11_512 (2011)

CONTACTS

Dipl.-Ing. S. Linß sebastian.linss@tu-ilmenau.de
Dipl.-Ing. A. Milojević andrijamilojevic87@gmail.com
Prof. Dr.-Ing. habil. L. Zentner lena.zentner@tu-ilmenau.de