URN (Paper): urn:nbn:de:gbv:ilm1-2011iwk-027:9

TRANSVERSE SENSITIVITY OF THREE-AXIAL HIGH SENSITIVE ACCELEROMETERS

V.A. Andrianov, V.D. Mazin

Saint-Petersburg State Polytechnic University

Abstract

Vector accelerometers are required to have fairly good space selectivity that, in turn, implies low transverse sensitivity. This requirement is essential for meeting tasks imposed by various fields of application, e.g. industrial seismology, seismic studies, and acoustic measurements. In this presentation, we discuss a possible solution of this sensitivity problem by exploring design of a sensor with bimorph piezoelectric plates and string suspension of an inertial element. This design, in principle, provides for high primary (longitudinal) and low transverse sensitivity. We will discuss addressing the problem through both, hardware design and circuit approaches. An additional side of the problem finds itself in a conflict between the principle task (*assuring high primary and low transversal sensitivity*) and at the same time providing for acceptable frequency band. The latter, however, is never too wide when small accelerations are being measured. We will show examples of designs that are suitable for all three fields of application listed above.

Keywords – seismology, seismic studies, acoustic measurements, vector accelerometers, transversal sensitivity, bimorph piezoelectric cells, strings, natural frequency, frequency correction, compensation.

1. INTRODUCTION

Hi-sensitivity vector accelerometers (three-axial accelerometers) can find their application in the following areas:

- In industrial seismology, to read vibrations in foundations of buildings that house precision equipment;
- In seismic studies where this type of sensors proves to be more compact and reliable than ordinary seismometers.
- As vector receivers of acoustic fields.

Since the purpose of this kind of accelerometer is to determine a vector of oscillating accelerations, spurious transverse sensitivity becomes utterly important, for it distorts the signal produced by each axis via influence of two other axes. This sensitivity reduction can be addressed through either sensor design, or its circuitry, or both.

This presentation is about solving the stated problem in a piezoelectric accelerometer whose composition is illustrated on Fig. 1 [1].

2. ORIGINS AND CONSTRUCTIVE WAYS OF REDUCING OF TRANSVERSAL SENSITIVITY

The sensor houses a cubic shaped inertial element (1) whose facets have firmly attached piezo bimorphs (2) with electrodes (7). The other end of the bimorph is fitted with a tip (3) that is connected to frame (6) via flexible suspension. In order to reduce transversal sensitivity, this flexible suspension is made of a pair of strings (4) that are attached to the frame via retainers (5). This setup restricts motion in three mutually perpendicular directions. When the sensor's frame is exposed to acceleration, each pair of piezo bimorphs whose common plane is perpendicular to the vector of this acceleration is sensitive to it the most. Other bimorphs, whose common planes are parallel to the vector of acceleration, are feeling much less stress since the tips connected to the strings can move in the direction of acceleration. The greater transversal flexibility of the strings is, the lesser is the stress built up on the bimorphs.

These stresses would not cause any electrical charges on the sides of the piezo bimorphs if two conditions were met: preci-

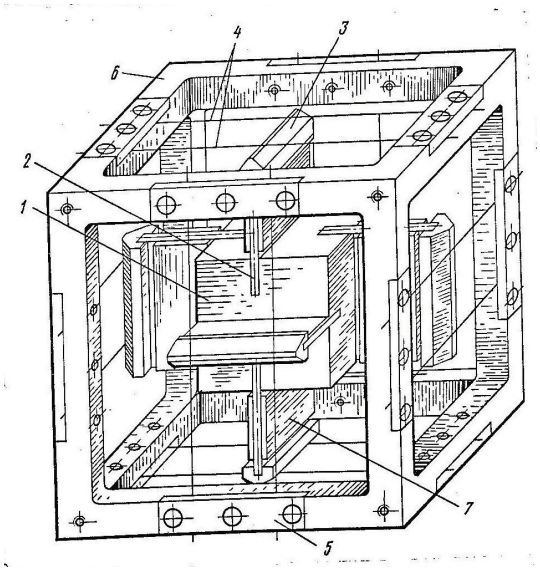

Fig. 1

se equality of piezo constants of each piezoelectric layer that bimorph is made of, and orientation of bimorphs in three precisely perpendicular planes. Consequently, transverse sensitivity will not exist in any of the following situations: 1) transversal stiffness of a string equals Zero, 2) bimorphs are built of absolutely identical halves and oriented precisely perpendicular to each other.

The first condition corresponds to an ideal loosened string. A string is as close to be termed ideal, as bigger its length-to-diameter ratio (l/d). In practice, a string can be considered ideal if l/d ≥ 300-500. However, the longer and thinner the string is, the lower its longitudinal stiffness, which in turn leads to lowering the upper limit of the frequency band. Also, it is important to keep in mind that putting the sensor together when the strings are loosened is relatively difficult.

Output voltage of sensor's X-axis is described by a formula

$$\dot{U}_x = \dot{K}\left(k_{qxx}\dot{A}_x + k_{qxy}\dot{A}_y + k_{qxz}\dot{A}_z\right), \quad [2]$$

where $\dot{K}$ – coefficient that takes into account sensor's affect on the object, mechanical lag, and whether an amplifier is present. k_{qxx}, k_{qxy}, k_{qxz} are one prime and two spurious coefficients of transformation of acceleration into electrical charge, $\dot{A}_x, \dot{A}_y, \dot{A}_z$ are components to acceleration vector. Coefficient

$$k_{qxy} = 6m_{eq}\frac{C_t}{C_{eq}}\overline{d}_{31}\frac{l_b^2}{h^2}\sin\alpha_1,$$

where m_{eq} – mass that is loading piezos, C_t – string's transversal stiffness, C_{eq} – total stiffness of the seismic system, $\overline{d}_{31}$ - average piezo constant for piezo layers that a bimorph is made of, l_b and h – length and thickness of a bimorph respectively, α_1 - an angle of unwanted angular error of the cubic element with bimorphs attached in XY plane due to assembly imperfection (See Fig. 2).

Obviously, the ratio $S_{xy} = \frac{k_{qxy}}{k_{qxx}}$ expresses transversal sensitivity along the Y-axis.

Fig. 3 illustrates dependency of this ratio from string's diameter and length assuming $\alpha_1 = 0.1°$, clearly showing increase of transversal sensitivity as the string grows thicker or becomes shorter.

X-axis sensitivity to acceleration $\dot{A}_z$ is caused by both, an angle α_2 of unwanted angular error of the cubic element with bimorphs attached to it in XZ plane (see Fig. 4), as well as spread in values of piezo constants between different piezoelectric layers of each pair of co-planar bimorphs, Δd = d1-d2-d3+d4. As a result,

$$k_{qxz} \cong 2m_{eq}\frac{C_t}{C_{eq}}\left(\Delta_d + 3\overline{d}_{31}\frac{l_b^2}{h^2}\sin\alpha_2\right).$$

Fig. 5 illustrates ratio $S_{xz} = \frac{k_{qxz}}{k_{qxx}}$ that is shaped very similar to the one shown on the Fig. 3; however, this time the rate of growth is twice as fast.

Since increase in sting's transversal compliance as usually leads to lowering of the upper limit of the frequency band, it becomes important to determine which effect prevails in the end. A criterion function expressed by

$$K = \frac{\omega_0^2}{S_{xy} + S_{xz}}$$

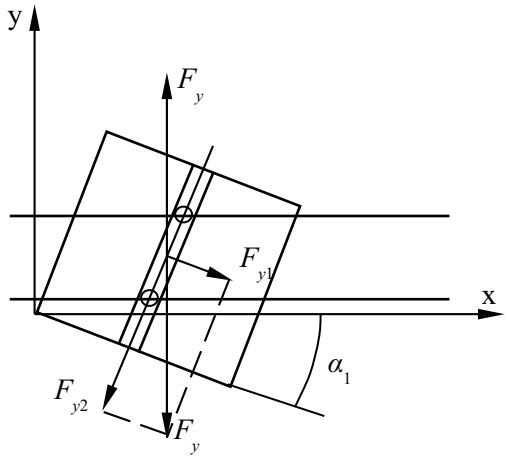

Fig. 2

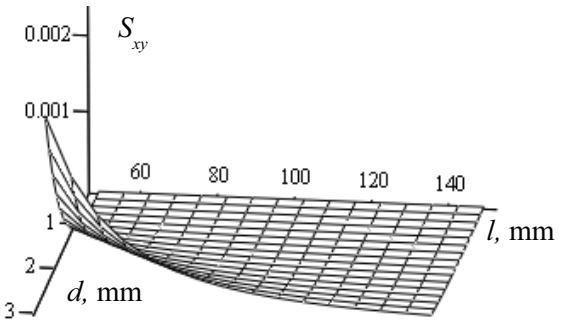

Fig. 3

gives such an explanation where ω_0 is system's natural frequency that, in turn, corresponds to the dynamic schematic shown on the Fig 6. Fig. 7 illustrates criterion K dependency on l and d (string length and diameter). From this figure, it is consequential that optimal combination between natural frequency and transversal sensitivity happens when the stings are thing and long. Since upper limit of the frequency band will then inevitably decrease, utilizing frequency correction becomes a matter of rational choice.

Images of two modifications of an accelerometer are shown on the Fig. 8, whereas image 8b represents design adopted for acoustic measurements.

Fig. 9 features the design of an accelerometer that has been modified to have the inertial element itself removed, and its job is taken over by piezo bimorphs that are

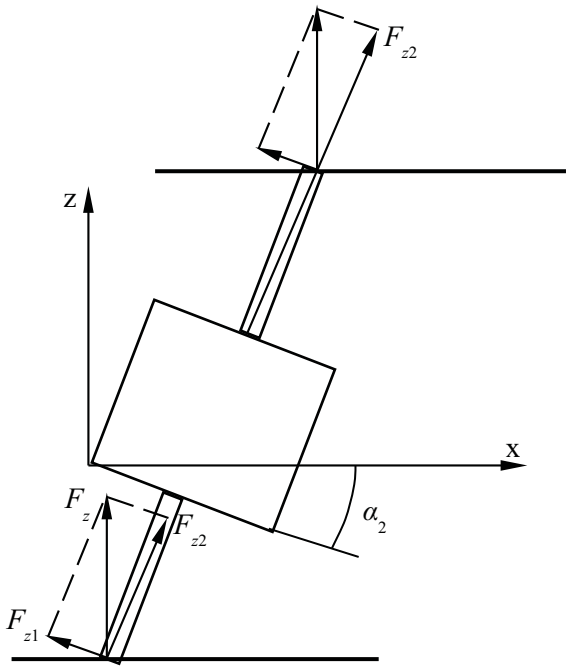

Fig. 4

inactive for a given directional component [4]. This design is found to be of somewhat lesser sensitivity but is also lighter and more compact.

In analyzing Fig. 9, please note that some details have been conventionally removed for visual clarity. In this design, the holder for piezo bimorphs is made of three mutually perpendicular rods (1, 2 and 3) that are firmly connected to each other in the middle. There are also three pairs of piezo bimorphs (4, 5 and 6) that are attached to the rods at midsection and therefore also situated in mutually perpendicular planes. For each pair, two co-planar bimorphs are in stalled with a gap wide enough to admit a pair of bimorphs in a perpendicular plane. Each pair of bimorphs is connected to the end tip (7, 8 and 9) that by this mean are attached to the strings (10, 11 and 12) of flexible suspension. Likewise the design shown on the Fig. 1, the ends of the strings are attached to the frame (13).

3. CIRCUITRY TECHNIQUES

It has been stated earlier, that increase in string's compliance leads to reduc-

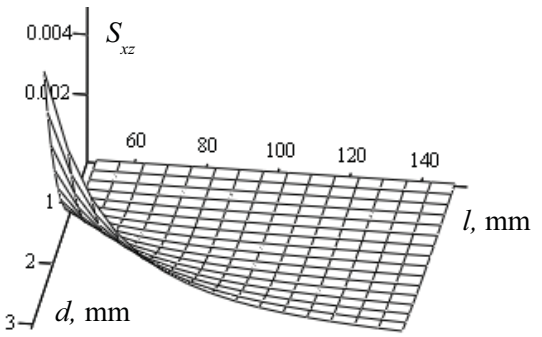

Fig. 5

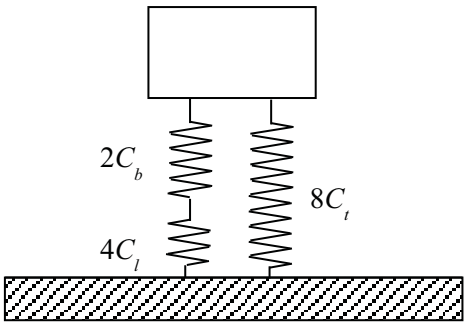

Fig. 6

tion of frequency band. As became known from experimenting, electrical correction makes it possible to eliminate this shortcoming by doubling the frequency band [3]. Fig.10 shows an equivalent wiring diagram of a sensor with correcting circuit and a test graph that displays results of such correction. The part of the circuit inscribed within the stitch line represents the sensor equivalent circuit, where capacities C_l and $C_к$ are essentially capacities of the sensor itself and its connecting cable. Graphs (2) and (1) rep resent sensor's performance with and without correction respectively.

Another circuitry technique to reduce transversal sensitivity resides in compensating spurious "transversal" signals with parts of the prime output signals that are in counter-phase relation with them (see Fig. 11). This method is accomplished with an aid of scaling amplifiers (1) with either inverting or direct input, depending on relationship between phases of incoming voltages caused by transversal sensitivity and their compensating signals. The latter are fo-

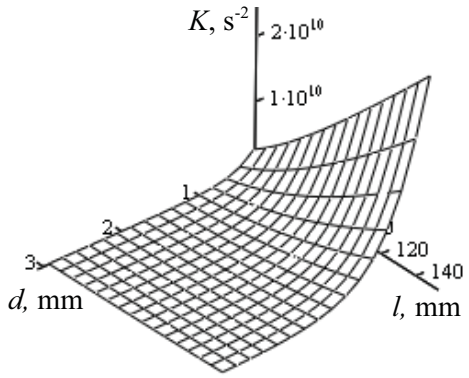

Fig. 7

rmed up from the signals of those components whose influence must be eliminated, and they are fed into the adders (2). Their magnitude is regulated by changing the ratio of the amplifiers (1).

4. EFFECT OF NOISES

Noise effect always plays a special role with hi-sensitivity sensors that are connected to amplifiers. Their sensitivity threshold is determined by not only noise qualities of the amplifier, but also sensor's own internal noises due to thermodynamic fluctuations of its mechanical composition.

In order to evaluate this kind of noise and compare it with noise emitted by the amplifier, it is necessary to consider spectral densities of sensor's noise S_{ns} and amplifier's noise S_{na}, both referenced to the same location, e.g. amplifier's input. In this case it is advantageous to visualize the sensor as a reversible four-pole converter. Output resistance of such a converter will consist of inherent resistance and coupled resistance Z_c caused by influence of mechanics. Active component of Z_c, in accordance with Nyquist's theorem, will determine spectral density S_{ns}.

Experimental research conducted by the authors showed the that bimorphs internal noise's spectral density in frequency range $\omega < \omega_0$ is changing according to the law similar to $1/\omega$. Obviously, that sensor's internal noise with similar bimorphs will have identical frequency curve. Simultaneo-

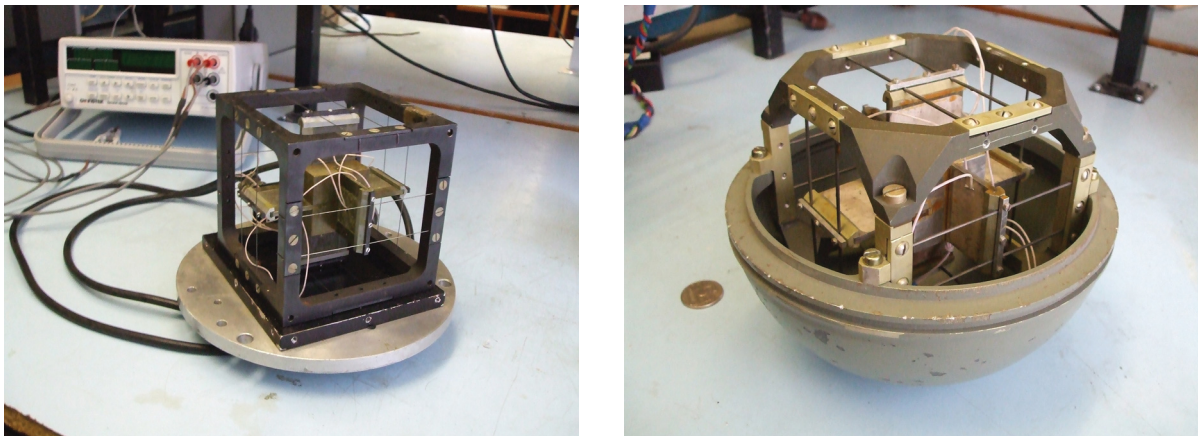

a) b)

Fig. 8

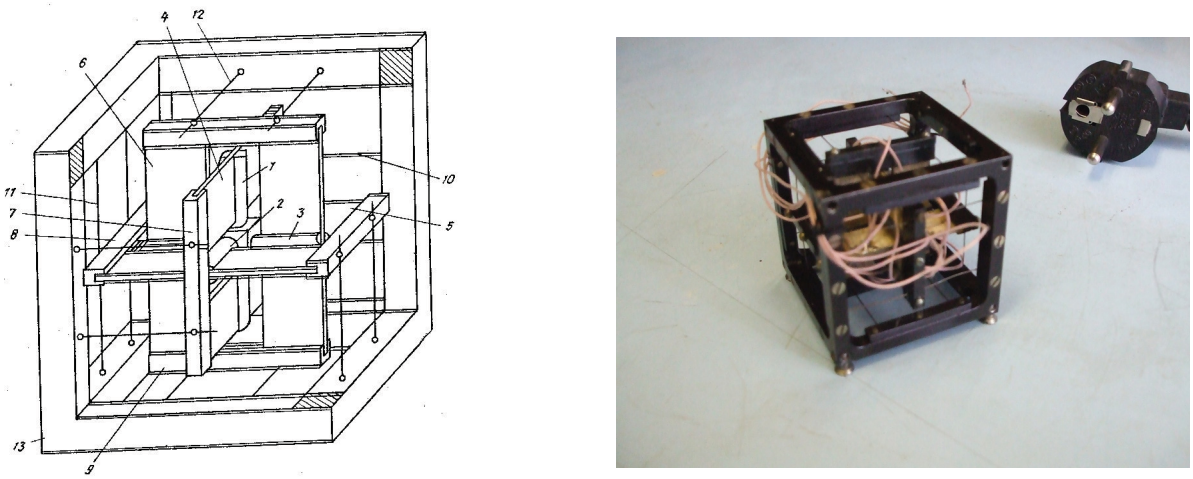

a) b)

Fig. 9

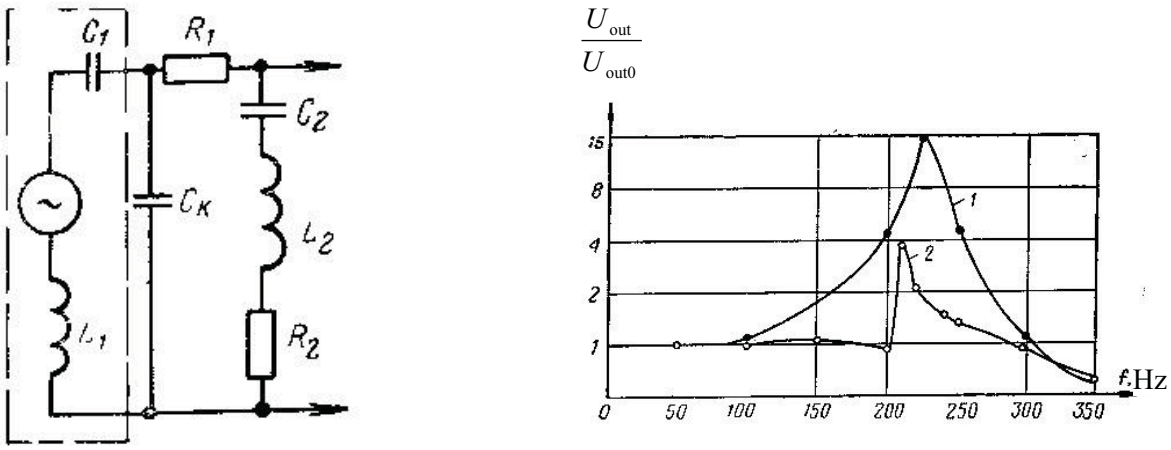

Fig. 10

usly, it turns out to be a match with amplifier's noise S_{na} . Conclusively, when estimating sensitivity threshold of this type of sensors, it is advantageous to consider two scenarios; one for $S_{ns} < S_{na}$, and the other for $S_{ns} > S_{na}$.

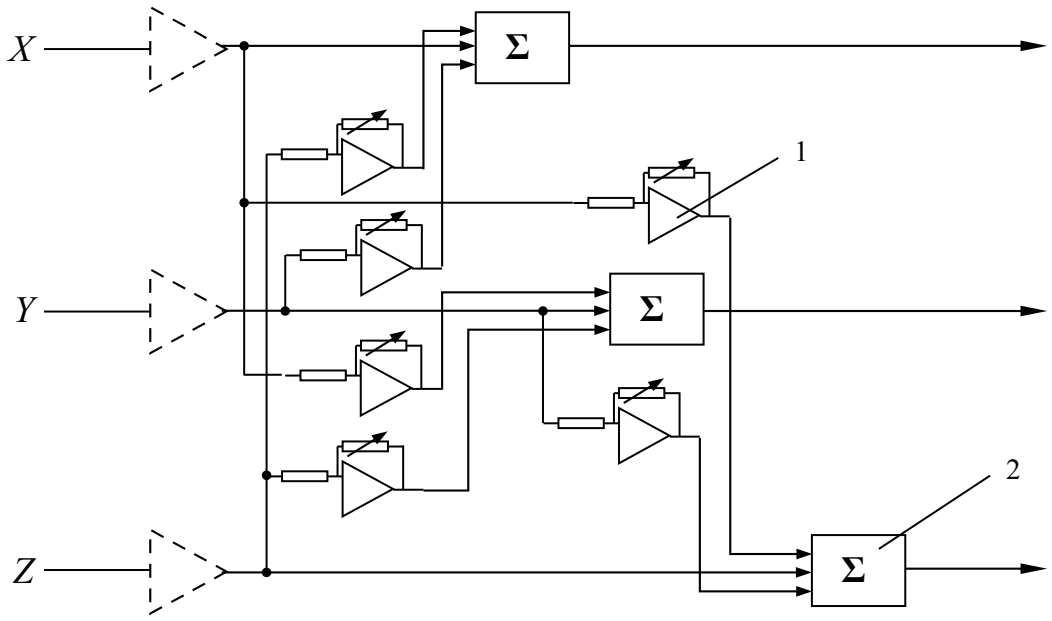

Fig. 11

Let us estimate sensitivity threshold assuming that it is determined by amplifier's noise ($S_{ns} < S_{na}$).

As commonly known, for a wide range of amplifiers their noise qualities are defined by the sources of voltage and current at the input. If a signal source with capacitive resistance $1/\omega C$ is connected to the amplifier, then the spectral noise density referenced to the input will be

$$S_n = \frac{S_i}{K_c^2 \omega^2 C^2} + \frac{S_u}{K_c^2},$$

where S_i и S_u - spectral densities of noise's current and voltage correspondingly, K_c - sensitivity of the converter.

5. CONCLUSIONS

Summarizing, in order to increase multi-axis selectivity of a sensor of this design, it is recommended:

- Using strings with l/d ratio as large as possible,
- Minimizing string tension in assembly,
- Using piezo bimorphs with as much identical constants as possible, achievable either via improvements in manufa cturing technology or selecting of a large pool of parts,
- If necessary, use frequency correction to compensate reduction of frequency band due to decrease of string's longitudinal stiffness,
- If necessary, compensate spurious signals from transverse components of the acceleration vector with output signals from prime axes of the sensor.

6. REFERENCES

1. A. c. 505900 USSR, IIC G 01H 1/00. Three-axial vibration detector / V.D. Mazin (USSR).– № 1976355/18-10
2. *Mazin V.D.* Sensors for Automatic Systems. Metrological Analysis: school-book / V.D. Mazin.– St. Petersburg: Polytechnic University Publishing house, 2000. — 79 P. (in Russ.)
3. *Andrianov V.A.*, *Mazin V.D.* Low Accelerations Measuring with Piezoelectric Transducers / V.A. Andrianov, V.D. Mazin // MCA (ИКА). — 1979. — № 5 (in Russ.)
4. A. c. 715938 CCCP, IIC G 01H 1/04. Three-axial vibration-survey transducer / V.A. Nikulin, V.D. Mazin (USSR) .– № 2188747/18-28