PROCEEDINGS

55. IWK

Internationales Wissenschaftliches Kolloquium
International Scientific Colloquium

13 - 17 September 2010

Crossing Borders within the ABC

Automation,

Biomedical Engineering and

Computer Science

Faculty of
Computer Science and Automation

www.tu-ilmenau.de

TECHNISCHE UNIVERSITÄT
ILMENAU

Impressum
Published by

Publisher:	Rector of the Ilmenau University of Technology Univ.-Prof. Dr. rer. nat. habil. Dr. h. c. Prof. h. c. Peter Scharff
Editor:	Marketing Department (Phone: +49 3677 69-2520) Andrea Schneider (conferences@tu-ilmenau.de) Faculty of Computer Science and Automation (Phone: +49 3677 69-2860) Univ.-Prof. Dr.-Ing. habil. Jens Haueisen
Editorial Deadline:	20. August 2010
Implementation:	Ilmenau University of Technology Felix Böckelmann Philipp Schmidt

USB-Flash-Version.

Publishing House:	Verlag ISLE, Betriebsstätte des ISLE e.V. Werner-von-Siemens-Str. 16 98693 Ilmenau
Production:	CDA Datenträger Albrechts GmbH, 98529 Suhl/Albrechts
Order trough:	Marketing Department (+49 3677 69-2520) Andrea Schneider (conferences@tu-ilmenau.de)

ISBN: 978-3-938843-53-6 (USB-Flash Version)

Online-Version:

Publisher:	Universitätsbibliothek Ilmenau ilmedia Postfach 10 05 65 98684 Ilmenau

Home / Index:
http://www.db-thueringen.de/servlets/DocumentServlet?id=16739

DESIGN AND DEVELOPMENT OF A COMMUNICATION MIDDLEWARE FOR AMBIENT ASSISTED LIVING ENVIRONMENTS

Karsten Renhak[1]; Michael Federspiel[2]; Jochen Seitz[1]; Hans-Peter Schade[2]

Ilmenau University of Technology
[1]Communication Networks Research Lab
[2]Audiovisual Technology Group
Ilmenau, Germany
{karsten.renhak; michael.federspiel; jochen.seitz; schade}@tu-ilmenau.de

ABSTRACT

The changing demography requires new kinds of support for elderly people. Technical assistance systems could allow (aged) people to stay longer in well-known neighborhoods. While utilizing familiar media usage habits, the acceptance rate of a technical assistance system will be increased. Therefore, as many as possible potential communication methods between users and the assistance system are required. This paper describes an assistance system which get designed, developed and deployed within the research project called "WEITBLICK".

Index Terms - assistance system for elderly, changing demography, individualization, information management, broadcast, middleware

1. INTRODUCTION AND MOTIVATION

Well known demographic shifts and an increasing life expectancy in many industrialized countries combined with spatial expansion or breakup of classic families as former generation structures of solidarity will result in a lack of care supply for elderly people. National insurances in the present state will not be able to handle the growing need of assistance in daily-life processes. The dissociation of physical and cognitive abilities is an individual process. It will become more important in relative and absolute terms for health care in general. Individual care and assistance systems could help in supplying appropriate services for everyone in the near future. Reference [1] illustrates general aims and core functional concepts of an assistance system called "WEITBLICK" (see section 2).

As mentioned before, getting older is an individual process. It is linked with the independent change of physical and cognitive abilities unfortunately. A wide range of physical and sociocultural events and habits affect this process of changes.

While offering any kind of assistance systems, they have to take into account the users' habits. Here, a major challenge is to lower acceptance barriers. Otherwise, any new assistance system will fail. Usually communication or entertainment usage activities are subject to long performed habits.

In order to re-educate someone in the handling of communication or entertainment devices a subjective and identifiable additional value is essential. Otherwise users will not leave old routines. Such an incentive could be for example information about collective activities or local news.

For the success of an assistance system, it is mandatory to support as many communication patterns as possible. So a prospective user could decide how to use the system and the offered services.

2. THE PROJECT "WEITBLICK"

The project title "WEITBLICK" is a German acronym. A translation could be the phrase: "Knowledge-based technologies and services tailored to suit the needs of senior citizens". This definition also represents the goals and main principles of the project. An interdisciplinary consortium was founded by partners from science, economy and eldercare to build an assistance system with the ambitious aim to create, design and prototype an interactive assistance system for seniors with several grades of autonomy, activity and mobility. Main technical components and principles are discussed in [1]. Figure 1 illustrates the concept of the general communication model and major components of the assistance system.

The Server shown in Figure 1 represents the central system component. Data and information management is a key module and it is linked with a recommendation system described in [1] and [2]. This recommendation system continuously analyses and links present information about users, their history and offered services. So the recommendation system could create individualized messages and service offers for each user. Realization of perspective assistance services is done by separate function or service entities, like the web server, navigation or monitoring modules. Those function entities on the other hand are using services from the central

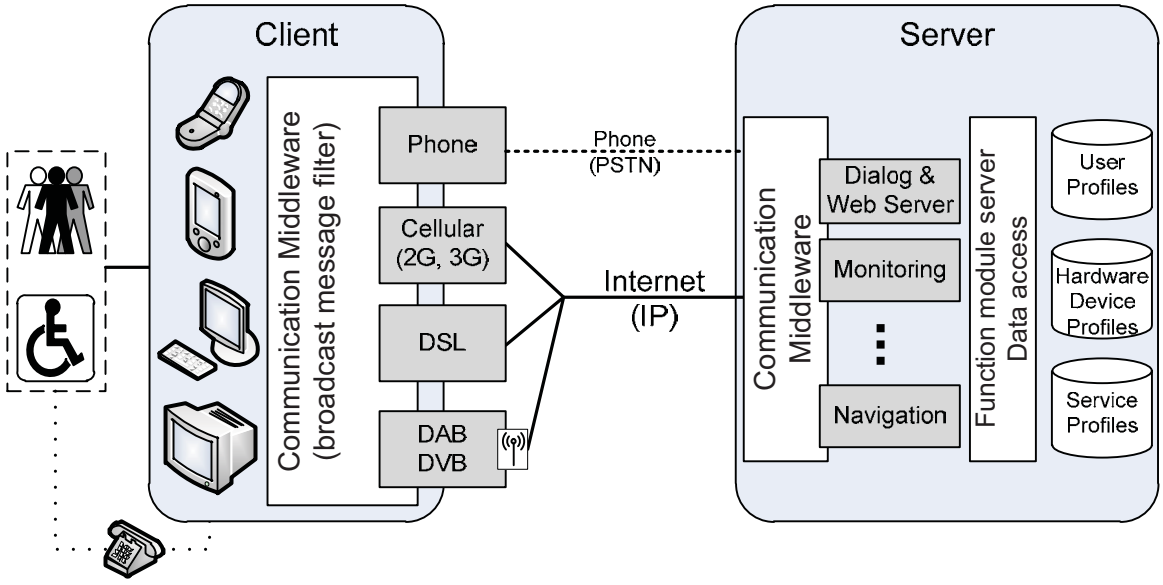

Figure 1 WEITBLICK communication model and system overview

function module server to gain access to information stored in the database.

The Client on the other side (see Figure 1) represents exemplary choices of prospective user devices. Diversity in user target groups should reflect in multiple ways to use the assistance system. So a user is able to decide with which kind of gadget the WEITBLICK assistance system gets utilized.

A corresponding communication middleware on the client side is located between user devices and the illustrated communication technologies like phone, 2G/3G mobile, DSL or DVB in Figure 1. A major task of this additional data processing instance is filtering incoming data traffic. Assigning related messages to one communication session is also covered by the client side communication middleware, no matter what communication technology is utilized. This could happen within the usage of unidirectional communication technologies for example. In case of broadcast communication technologies local filter software is mandatory as described in section III.C. Setting up this filter module could be done by the user himself or remotely via the assistance system.

The outer left hand side of Figure 1 represents prospective users. Beside usual human-machine interfaces provided by ordinary hardware devices it should be possible to interact with the assistance system via a call center agent. This use case corresponds to the dotted line with a phone between the user and the client in Figure 1.

Nevertheless, focus concerning communication between the central Server and Client devices is based on the internet protocol (IP). The center of Figure 1 illustrates the usage of different communication technologies to interact between Server and Client. Here, all service entities (Server) communicate via the Communication Middleware with all kinds of clients using IP. The dotted phone link between Server and Client represents an optional interface of public switched telephone network (PSTN) services offered by the assistance system.

A software based private branch exchange (PBX) could be used for example, to offer individual service booking via dial codes or voice recognition interface. But such functionalities are not integral parts of the project and will not be discussed here.

All communication technologies illustrated in Figure 1 are scheduled for utilization in the WEITBLICK assistance system. The next chapter will introduce and compare them in general.

3. DEALING WITH HETEROGENEOUS COMMUNICATION TECHNOLOGIES

An assistance system, which is utilizing a wide range of new media [3], implies the usage of corresponding technical communication systems below. Therefore, it is necessary to support as many communication technologies as possible to get in touch with a wide range of prospective users.

Well known IP-based communication systems cover an extensive area of hardware devices (mobile phones, personal computers, multimedia TV set-top boxes, et cetera). Obviously, IP communication offers solid transport protocols and a large tool box of implementations and libraries to profit from. On that basis, deploying a communication system for an elderly people assistance system is an almost easy task – in theory so far. In real world environments things get more complex. Different communication technologies to contact end users IP-devices have unique properties and limitations. There are differences in communication channel bit rates, display dimensions and input methods for example, which have to take account by an assistance system

like WEITBLICK. But as mentioned before, it is required to leave the decision about communication habits and involved technologies on the user side.

The subsections below describe three different communication technologies to get in touch with user hardware devices. This choice of communication technologies and their illustrated properties do not claim to be complete.

3.1. Cellular radio (2G, 3G)

Due to the success of multimedia capable smart phones [4] IP-based services become more and more popular and affordable for the mass-market. Also a lot of mobile computers are capable to gain Internet access via 2G or 3G cellular-radio networks today.

Advantages:

- Mobile usage is possible.
- High network coverage at least in Europe.
- Well tested communication hardware adapters are available.
- Saturated penetration of mobile subscribers in Europe [5].
- Common services like phone calls or text messages are feasible.

Disadvantages:

- Due to the shared medium (radio) data transfer rates vary in time and location.
- Costs are usually composed of fixed monthly and per usage data and voice plans. But unlimited (fixed price) plans get available and cheaper.
- Often, a private IPv4 network with network address translation (NAT) gateways to public Internet is used.
    - User device has to initiate each communication session to reach a server in the public Intent.
    - Either some kind of polling by the user gadget or a tunnel set up is required to provide bidirectional communication.

Besides ordinary smart phones, some specialized mobile devices (e.g. MAMBO2 [6]) are available. The gadget shown in [6] is different from usual mobile phones because of additional (radio) hardware modules for localization or wireless sensor support, for example. An additional wrist-top interface is also available. Further, a mandatory device and data management software is necessary to access additional services. Apart from the license costs, communication is bundled with the proprietary application programming interface (API). Before utilizing such proprietary solutions in an assistance system, the balance of advantages and constraints has to be surveyed carefully.

3.2. Broadband internet access (DSL, cable TV)

Even before mobile IP services got popular, residential broadband internet access services spread worldwide. Technologies like “Digital Subscriber Line” (DSL) or “Data Over Cable Service Interface Specification” (DOCSIS) are used to connect users with internet service providers (ISP). In the context of data communication, broadband internet access means high data rates in contrast to dial-up connections using a 56k modem. DSL for example usually offers downstream data rates from 0.5 to 16 Mbit/s for each user.

Advantages:

- High data rates possible; typically multiple Mbit/s for downstream.
- High penetration in Germany (27.4%, 22,532,000 total [7]).
- Usually one public routable IP address for each residential router or modem. Local access to router configuration. In case of NAT gateway functionality, port forwarding to the assistance system device could be set up.

Disadvantages:

- Stationary usage only, but might be extended using WLAN.
- Line parameters to service provider affect regional availability.
- If residential router has NAT gateway functionality and it is not possible to configure port forwarding, polling or a tunnel set up by the assistance system is mandatory (see section 3.1:Disadvantages).

3.3. Digital broadcast (DAB, DVB)

Another possibility to transmit information in an assistance system is using data services of digital broadcasting services. There are many different standards worldwide like Digital Video Broadcasting (DVB), Digital Audio Broadcasting (DAB) or Advanced Television Systems Committee for digital television (ATSC) and data broadcasting principles of those systems are similar. Here, data which have to be transmitted are stored in a so called data or object carousel [8], a kind of circular buffer for all objects to send. Each piece in the buffer is a set of content located on the edge of the circle. Then the circle rotates together with all parts of the contents as if they are attached to the circle.

The main problem is that content data of an assistance system is highly specialized to each user. The recommendation system (see section 2) generates the content for each individual user or at best for small groups. Furthermore, the groups are not fixed and it is possible that they change frequently.

When using a broadcast medium it is complicated to address an individual user or group. This constraint could get solved by a local filter on the receiver set-top box. Here, each receiver has to know its unique user identification and one or more group memberships. While constantly filtering all inbound data traffic from the recommendation system, the receiver is able to pick up relevant data packets. This

means that each broadcast message has to contain such identification patterns. But with a rising number of users more and more identification patterns in each message are required. So the proportion of metadata and content is getting worse.

Another solution could be found in the usage of an index table. This separates metadata and content from each other and it is further possible to assign priorities within objects in the data carousel. An additional benefit is the higher rotation frequency of the data objects in a carousel resulting from smaller sizes of the content files. Once a receiver set-top box gets this index table, it knows which content is addressed to itself. After receiving all relevant content elements from the carousel the receiver could enable a power save mode until the next carousel cycle restarts. Now, only relevant incremental content elements updates have to be received in one carousel cycle.

In both cases the advantages of a broadcast medium are not always utilized if the majority of transmitted data are individual messages. Use cases with messages for a large group of users which do not require acknowledgments on the other hand would be perfectly qualified for broadcast media. One solution to offer a wider range of assistance services via broadcast media could be in booking of higher bandwidth or increasing the carousel cycle and to slow down the transmission frequency of content elements respectively. Another approach is the separation of content and index tables. In this case content is send with a unique message identification by the broadcast medium but the receiver downloads a personalized broadcast index table by another medium like 2G or 3G cellular radio network e.g. But such a scenario depends on the actual use case and it might not always be appropriate.

As you could see, individual communication via a broadcast medium implies a lot of overhead in transmitted data as well some conceptual efforts in designing the system structure. Nevertheless broadcast media are capable of spreading information within their coverage area. If an assistance system is transmitting messages via digital broadcast communication technologies it should choose them carefully.

Advantages:

- Mobile usage is possible (DVB-T, DAB).
- High availability within footprint.
- No output queue, this means every receiver gets the data at the same time.
- Costs are fixed; they do not depend on the number of receivers or users.

Disadvantages:

- Only unidirectional communication possible.
- Addressing of individual users is difficult.
- Time delay likely if lots of different messages are in data carousel.
- High administrational and financial effort required to lease and set up a broadcast channel.

4. CONCEPT OF A COMMUNICATION MIDDLEWARE

As shown in the section before, each communication technology has its unique properties. A communication middleware is helping to simplify the assistance system design, especially when a consistent message exchange over many different communication technologies should occur. While designing such a communication middleware the following goals should be considered:

- Providing a flexible and uniform communication infrastructure.
- Smart selecting of appropriate communication technology for each communication session.
- Communication technologies should be interchangeable and independent (as far as possible).

As mentioned before, the communication middleware of the WEITBLICK assistance system is located on the central server as well as on client side (see Figure 1). The basic functions of the client side communication middleware were introduced in section 2 in general. This chapter will discuss major and more complex functions, which are done by the central server side middleware. Further an overview about the implementation structure of the server side communication middleware will be discussed.

Figure 2 illustrates the general design of the server side communication middleware. A functional separation is taking place, to split higher level operations from low level procedures that do not interpret or modify any messages.

All message exchange is based on the *OpenMQ Message Broker* [9] and it is utilizing *Java Message Service* (JMS) API [10] (see Figure 2). The JMS API enables a loosely coupled distributed communication between *message producers* and *message consumers*. [10] is defining further two possible message exchange approaches: *point-to-point* (*Queue*) or *publish-subscribe* (*Topic*). Booth approaches are supported by *OpenMQ Message Broker*.

New messages from the WEITBLICK core system are passing the *Information Management* module. First a pre-selection of possible and available user devices which are suitable for the present message will be performed. Thus a database lookup is required to determine all online user devices, which are proposed from the core system. If no available device is capable to display the given message, a data transformation has to take place to meet the certain criteria for a specific hardware device. But such a data adjustment is limited to a few predefined transformation rules. E.g. it is not possible to

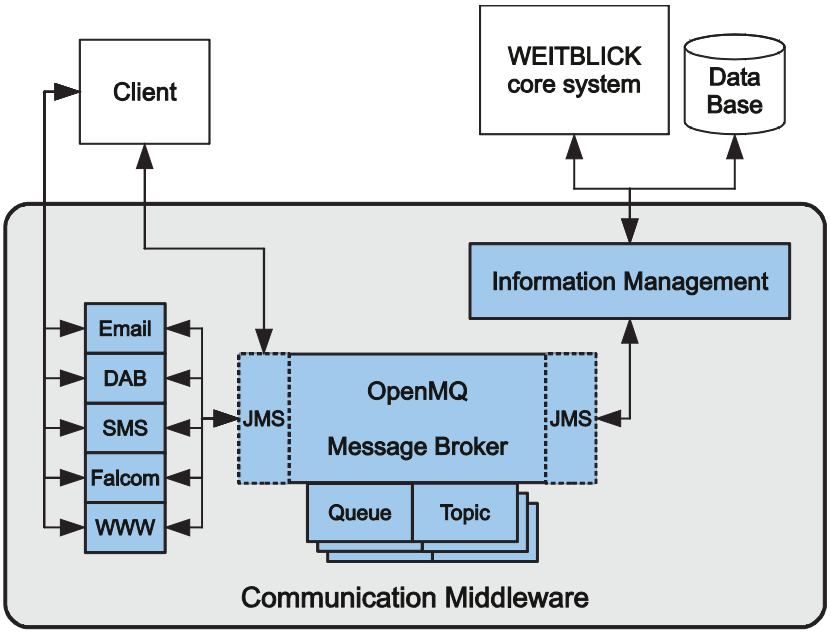

Figure 2 WEITBLICK server side Communication Middleware implementation structure

transform a large scale bitmap to a text message for a mobile phone. At the end, all remaining potential user devices should be capable to display the given message.

After finding a suitable user device for each message, the device has to be addressed via the *OpenMQ Message Broker*. Therefore a database lookup is necessary to determine the corresponding *Queue* or *Topic* for the clients' user device. There are basically two different approaches for a user device to receive and send messages to the WEITBLICK assistance system. Either the client device is using a local JMS client or one of the gateways in Figure 2 (on the left side) are used to receive and send messages. Each of those messaging gateways enables the utilization of certain communication methods and technologies, which are not covered by the JMS API directly.

Every message gateway from Figure 2 requires diverse additional information to convert JMS messages to the target message format like e-mail for example. These additional information have to get inserted as application-specific properties into the JMS messages by the *Information Management* module after the choosing the "best fitting" communication path for each message.

Message management and allocation of *message IDs* is another task of the information management module. Here, information about all incoming and outgoing messages including *message ID*, *session ID* and *user ID* has to be saved in the central data base for later use and documentation. Based on this stored information it is possible to assign all incoming messages to a known or new session ID and forward them to the respective core service. Further, state and error messages for core system services could be created and delivered if it is necessary.

All outgoing and incoming messages are queued by the *OpenMQ Message Broker*. It is managing queues or topics and support e.g. message persistence, expiration and priorities. It is further possible to use encrypted JMS message exchange or to mange access rights for each *Queue* and *Topic*. With such a messaging system ([9], [10]) a developer can focus on application-specific details and do not has to deal with "low-level" things like queue management et cetera.

5. CONCLUSIONS AND FURTHER WORK

The concept of the discussed middleware provides a homogeneous communication interface in heterogeneous infrastructures for assistance systems. A long-term goal consists in avoiding the expensive adaption of specialized services to multiple constantly changing communication technologies and user devices. First prototypes of the assistance system will be deployed in the near future to verify user acceptance, human-machine-interfaces, parameters of the core recommendation system and multiple communication technologies as well.

Some details of the presented communication middleware design are still in a state of flux. E.g. rules for content or data transformation to fulfill the needs of certain user devices should be specified and implement. Policies and adaption processes for selecting "best fitting" user device have to be defined. Beside that, the management of digital broadcasting services requires some more investigation. Establishing additional interfaces and methods to control message priorities, group communication and the data carousel is necessary too.

The next steps on the WEITBLICK project agenda include implementation and extensive test cases.

During this period we are looking forward to clear remaining tasks and include first user feedback into the implementation.

ACKNOWLEDGMENT

This paper emerged from a project funded by the German Federal Ministry of Education and Research (BMBF) under the support code 01FC08029 named "WEITBLICK". The authors would like to thank all the involved staff members of the Ilmenau University of Technology from the Depts. of Systems Analysis and Biomechatronics and the partners from outside the University: the AWO Alten-, Jugend- und Sozialhilfe gGmbH, Falcom Wireless Communications GmbH in Langewiesen and KDS Services GmbH & Co. KG, Erfurt.

6. REFERENCES

[1] S. Lutherdt, et al., "Design of an assistance system for elderly based on analyses of needs and acceptance," in UAHCI '09: Proceedings of the 5th International Conference on Universal Access in Human-Computer Interaction. Addressing Diversity. Part I, Springer-Verlag, 2009, ISBN 9783642027062, pp. 96 – 105.

[2] C. Stiller, F. Roß and C. Ament, "Towards Spatial Awareness in Recommender Systems," in Proc. of The 4th International Conference for Internet Technology and Secured Transactions (ICITST'09), London, pp. 555 – 560.

[3] N. Wardrip-Fruin and N. Montfort, ed., The New Media Reader, The MIT Press, ISBN 0-262-23227-8, 2003, pp.16 – 23.

[4] Wikipedia contributors, Smartphone [Internet], Wikipedia, The Free Encyclopedia; 2010 Jul 28, 23:10 UTC [cited 2010 Jul 29], Available from: http://en.wikipedia.org/w/index.php?title=Smartphone&oldid=375996142.

[5] International Telecommunication Union, "Measuring the Information Society - The ICT Development Index 2009", ISBN 92-61-12831-9, Available from: http://www.itu.int/ITU-D/ict/publications/idi/2009/index.html.

[6] FALCOM Wireless Communications GmbH, MAMBO2 - Personal tracker & mobile phone [Internet], Product description, 2009 Nov 9, Available from: http://www.falcom.de/products/personal-tracker/mambo2/.

[7] Organisation for Economic Co-operation and Development (OECD), "OECD Broadband Portal – Broadband subscribers per 100 inhabitants (Dec 2008)" [Internet], 2009 Nov 9, Available from: http://www.oecd.org/sti/ict/broadband.

[8] W. Fischer, Digital Video and Audio Broadcasting Technology, 2nd ed., Springer-Verlag, ISBN 9783540763574, 2008.

[9] Oracle Corporation, OpenMQ – Glassfish Open Message Queue [Internet], Open source project home page, 2010 Jul 30, Available from: https://mq.dev.java.net/

[10] Sun Microsystems, Inc., N. Deakin, Java™ Message Service (JMS) API, JSRs: Java Specification Requests, JSR 914 version 1.1, 2002, Available from: http://www.jcp.org/en/jsr/detail?id=914